College Station Fire Department

Fire Prevention Division

Construction
&
Development Guide

Revised Jan 2009

Preface

This guide is intended to assist architects and developers in preparing plans for submittal to the City of College Station for review. This guide deals mainly with the construction requirements of the College Station Fire Department, and does not address the requirements of other departments within the city. The items addressed are requirements found in the following codes: the 2006 International Fire Code, 2006 International Building Code, and National Fire Codes published by the National Fire Protection Association, 2006 Life Safety Code, Local Codes, City Ordinances, and Policies. Local Amendments to the adopted codes can be found in the city code of ordinances chapter 6.

In reviewing plans for new development the two main concerns of the fire department are *Access* and *Water Supply* for fire fighting purposes. These two concerns are examined in detail when an initial site plan is submitted for approval, and again when construction plans are being reviewed prior to issuance of a building permit. A set of standard comments is found in (Appendix B-1) which you should review each time you plan a development and prior to submitting a set of construction plans for review.

In reviewing plans for remodeling or new construction projects, the Fire Department is concerned with several major items. These items are checked utilizing the above-mentioned codes for reference. The codes used will depend on the type of facility being constructed. **If two different codes reference the same subject then the more stringent code shall apply.**

Please prepare your plans with the knowledge that our ultimate goal is to ensure life safety. While every effort is made to be very thorough in the plan review process, there is a possibility something may be overlooked during the plan review process. If this occurs the problems may be noted during one of the site inspections, or at the final inspection for the Certificate of Occupancy. Compliance may be required prior to the issuance of the Certificate of Occupancy. Therefore, if you feel some aspect of your project requires special attention, or you have specific questions, please bring this to our attention as soon as possible. We prefer to utilize the plan review process as a positive time to review important issues rather than trying to correct costly problems at the end of a construction project.

We encourage pre-development consultations to discuss projects prior to plans being completed. Please contact the Development Services Office at (979)764-3570 or our office to schedule an appointment or to ask a question. You may contact a member of the Fire Prevention Division by mail or phone at the following location.

College Station Fire Department
Fire Prevention Division
300 Krenek Tap Road
College Station, Texas 77842
(979) 764-3705

Table of Contents

Preface 2

Table of Contents 3

Permits required by the Fire Marshal 4

Construction Checklist 5--10

Water Supplies 11

Fire Sprinkler and Alarm System Requirements 11--14

Kitchen Fire Extinguishing Systems 14

Appendix A 15

- Fire Hydrant Installation Detail A-1
- Fire Hydrant Bollard Detail A-2
- Approved Access Turnaround A-3
- Turning Radius Specifications A-4
- Fire Lane Markings A-5 & A-6

Appendix B 23

- Standard Comments B-1
- Plans Submittal Checklist For New Construction B-2
- Plans Submittal Checklist For Remodeled Tenant Space B-3
- Addressing Requirements B-4

Permits required by the Fire Marshal's Office

In order to receive a permit for work within the City of College Station two sets of plans must be submitted to the Fire Marshal's office for approval. Permits for work include but not limited to:

1. Fire alarm.
2. Fire sprinkler.
3. Fire sprinkler underground lines.
4. Commercial cooking hood suppression system.
5. Underground liquid petroleum lines at service stations.

All plans must be approved by the Fire Marshal or a designee and a permit issued before any work can start. Failure to adhere to these guidelines may result in a warning issued or fines issued. The permit and approved plans must be onsite at all times the work is being performed.

COLLEGE STATION FIRE DEPARTMENT
CONSTRUCTION CHECKLIST

This checklist references items that are critical to the plan review process and the eventual outcome of the Fire Final Certificate of Occupancy (C.O.) Inspection. This is a partial list only and should not be construed to be all inclusive of the Fire, Building, and City codes. The developer or his representative should be well versed in all applicable codes.

Note: All items within this checklist may or may not apply to your specific development.

Plan Review Process

(See Appendix B-2, B-3)

Plans approved by all applicable city agencies

Fire hydrant and fire lane locations will be approved by Engineering. The water system is required to show existing and proposed water mains, main size and fire hydrant locations with distances from the proposed building.

Building permits are issued by the College Station Building Department.

Address Requirements

(See Appendix B-4)

- ❑ Each property within the College Station City limits must be numbered in compliance with city ordinance, Chapter 6 Section 1 (B) (12)City of College Code of Ordinances. The Building Official shall designate the official number to be located on the structure. Each structure on the premises that is not an accessory structure shall also be numbered in a conspicuous manner. A person may request an official number designation by submitting the legal description of the property to the Building Official.

- ❑ Assigned addresses shall be posted on construction sites in a highly visible location facing the addressed street. The address shall be in place during the construction period of the project. Numbers shall be no less than five (5) inches tall and have no less than one half (½) inch stroke on a contrasting background.

- ❑ The owner or his representative shall provide the Fire Department with emergency phone numbers prior to any site construction.

Fire Hydrants

(See Appendix A-1)

- ❑ The College Station Development Engineer shall approve locations of fire hydrant(s).
- ❑ Fire hydrants must be serviceable (wet), accepted by the City Engineer and accessible during all phases of combustible construction on the project.
- ❑ The calculated fire flow projections of fire hydrants and fire mains shall be submitted to the College Station Development Engineer for approval.
- ❑ Fire hydrants shall face the proper direction. The steamer connection (large 4½ inch connection) shall face the drive surface. Indicate direction on plans. All caps shall be in place on hydrants. *Refer questions on hydrant directions to the College Station Fire Marshal.*
- ❑ The College Station Development Engineer, if required, shall approve bollard protection. (See Appendix A-2)
- ❑ Proper grading and elevation around hydrant must be provided at the time of final inspection.
- ❑ Vegetation and landscaping shall be placed in a manner as not to obstruct or impede a fire hydrant from view or use.

Fire Lanes

- ❑ Fire lanes are to be marked in accordance with city ordinance specifications, Chapter 6 Section 1 (B) (10) City of College Station Code of Ordinances. (See Appendix A-5, A-6)
- ❑ The College Station Development Engineer shall approve turning radius requirements. (See Appendix A-4)
- ❑ Design of fire department turnarounds must be provided to and approved by the College Station Development Engineer. (See Appendix A-3)
- ❑ The minimum access roadway width of twenty (20) feet and clearance height of fourteen (14) feet shall be provided on any designated fire lane. Buildings or portions of the building exceeding (30) feet in height shall have a minimum access roadway width of (26) feet located within a minimum of (15) feet and a maximum of (30) feet from the building, and shall be positioned parallel to one entire side of the building.

- ❑ Any deviation from the Unified Development Ordinance's surface specifications, require prior approval from the College Station Fire Marshal and the College Station Development Engineer. The alternative surface shall meet current College Station Development Engineer specifications for all weather surfaces.

.

Knox Box System

❑ The Fire Marshal requires all commercial properties to install a Knox Box System when on-site security makes emergency access difficult, International Fire Code Section 506. Contact the College Station Fire Department Fire Prevention Division for order forms and key installation.

‘ The Fire Marshal requires all properties equipped with a sprinkler system to have Knox FDC plugs in the FDC connection.

- ❑ Contact the Fire Prevention Division for placement instructions prior to installation.

- ❑ Keys installed in the Knox Box shall be clearly labeled.

- ❑ Knox Box identification stickers for each entrance door are highly recommended.

Fire Extinguishers

Note: Extinguisher requirement may change with occupancy/ hazard classification.

- ❑ Minimum 2A-10BC rating (approximately 5 lb.) required. One extinguisher is required for every three thousand square feet, (**per floor).** Maximum travel distance to an extinguisher in light hazard occupancy is fifty (50) feet. **Travel distance is seventy-five (75) feet if occupancy is protected by a fire sprinkler system**.

- ❑ Extinguisher(s) mounted in a visible and accessible location (in path of egress if possible).

- ❑ Extinguisher(s) mounted no closer than four (4) inches to the finished floor and no higher than five (5) feet above the finished floor to the top of the extinguisher.

- ❑ All fire extinguishers are required to have a current inspection tag in place showing an inspection was performed within the past year. This inspection must be performed by a state licensed company. New extinguishers may have the receipt of purchase attached instead of an inspection tag for the first year only.

Fire Protection Equipment

(Where applicable)

Note: All fire protection systems shall meet the applicable N.F.P.A. standard.

- ❑ Alarm panels are to be accessible and properly labeled for different zones. Alarm panel locations shall be approved by the Fire Marshal's Office.
- ❑ Fire department connection shall be located no more than one hundred fifty (150) feet from a fire hydrant.
- ❑ Fire department connections shall be unobstructed at all times.
- ❑ Sprinkler system shall be tested by a member of the College Station Fire Marshal Office and monitored prior to any inventory being stored in the building. A copy of the monitoring contract shall be sent to the College Station Fire Department Fire Prevention Division.
- ❑ Sprinkler system controls and water flow switches are required to be monitored by an approved monitoring company.
- ❑ Sprinkler heads are clean of any foreign material, properly spaced, unobstructed and all concealed spaces properly protected.
- ❑ No storage or shelving closer than eighteen (18) inches of the bottom plane of sprinkler heads.

Signs and Labeling

- ❑ All sprinkler valves, shutoffs, etc. are required to be labeled in accordance with N.F.P.A. 13 guidelines.
- ❑ All fire alarms systems and zones are to be properly labeled in accordance with N.F.P.A. 72. (Zone map is required)
- ❑ Illuminated exit signs are installed in accordance with building plans, for additional exit requirements. (See Appendix A-7)
- ❑ Fire lanes are to be properly marked as required.
- ❑ "No Smoking" signs are posted in areas where readily combustible or flammable materials are present.

- ❑ N.F.P.A. 704 placards will be provided where required (N.F.P.A. 704, Section 1-2.1).
- ❑ "This door to remained unlocked when building is occupied" signs are posted when required by code.
- ❑ Occupancy card issued by Building Official is posted in all assembly occupancies.

Site Maintenance during Construction

- ❑ Exits and exit corridors are unobstructed during all phases of construction.
- ❑ Adequate removal of construction debris shall be performed during all phases of construction.
- ❑ Compressed gas cylinders are to be secured and properly marked.
- ❑ Access roads, fire lanes and fire hydrants are to remain unobstructed at all times during construction.
- ❑ Standpipe systems in high rise structures shall be maintained in accordance with International Fire Codes and NFPA 14 as the building is being constructed.

System Tests

A minimum of twenty-four hours advance scheduling and advance payment of testing fee is required for the following tests. Written certification will be provided.
Note: Test fee shall be paid in the Building Department.

- ❑ Alarm test
- ❑ Carbon dioxide and dry chemical systems
- ❑ Smoke detection systems
- ❑ Fire sprinkler and standpipe systems (200 psi hydrostatic test for new system, 150 psi hydrostatic test for remodeled or an addition to existing systems).
- ❑ Underground fuel tank and/or line test.
- ‘ Underground fire lines
- ❑ Commercial kitchen hood extinguishing system test

Inspection Request Sequence

- ❑ Development checklist is completed as applicable.

- ❑ Ensure all "*special permits*" have been finalized and all acceptance tests have been passed prior to requesting a Final Fire Inspection. **Note**: Contact College Station Fire Department Fire Prevention Division for all fire inspections.

- ❑ Building shall be unlocked so the inspector can gain entry to complete the building inspection unless prior arrangements have been made.

- ❑ Electrical power is on to the structure and all emergency back-up units are fully charged.

- ❑ The building permit and an approved set of construction plans are to be on-site during all inspections.

- ❑ The Certificate of Occupancy is issued by the Building Official after all inspections are satisfactorily completed.

Projects With Special Considerations

Contact the Development Coordinator in Development Services or the College Station Fire Marshal for assistance and scheduling of a pre-development meeting.

- ❑ High-rise buildings
- ❑ Large malls or shopping centers
- ❑ Large warehouses
- ❑ Apartment complexes
- ❑ Projects involving large quantities or storage and/or use of hazardous materials and/or flammable liquids
- ❑ Projects involving a hazardous manufacturing process or procedure

All plans for new construction shall be submitted through the College Station Development Coordinator who will be responsible for distributing the plans to the proper city departments for their review.

Water Supplies

Public fire hydrants shall be installed in single-family and duplex zoning districts at such locations that no part of any structure shall be more than five hundred (500) feet from a fire hydrant as measured along the right-of-way of a public street as the fire hose is laid off the fire truck. Chapter 6 Section 1 (B) (17) 508.5.2 City of College Station Code of Ordinances

Public fire hydrants shall be installed in districts other than single-family and duplex zoning districts at such locations that no part of any structure, aboveground tanks or fueling stations shall be more than three hundred (300) feet from a fire hydrant as measured along the right-of-way of a public street or along an approved fire lane as the fire hose is laid off the fire truck. The installation of public fire hydrants in such districts may be deferred and required as a condition of the building permit for structures. Chapter 6 Section 1 (B) (18) 508.5.3 City of College Station Code of Ordinances

Fire hydrants shall be tested prior to any construction. Hydrant locations shall be approved by the College Station Development Engineer. Fire hydrant access shall not be obstructed or impeded at any time.

Underground fire line must be hydro tested and witnessed by a member of the College Station Fire Marshal Office prior to cover-up.

All other regulations regarding water distribution should be directed to the College Station Development Engineer.

Automatic Fire Sprinkler System Requirements

Fire sprinkler systems shall meet the criteria of the 2006 International Fire Code, 2006 International Building Code and all applicable provisions of N.F.P.A. 13, 13-R, and 13-D, 2002. Plan submittal with required approval and permits must be secured through the College Station Fire Department. Permits must be obtained before any work can begin. All tests will be paid for at the College Station Planning and Development Services. All system inspections and tests should be scheduled through the College Station Fire Marshal Office.

Alarm Requirements

Alarm systems must meet the requirements of 2006 International Fire Code, applicable amendments in the City code of ordinances, 2006 International Building Code and amendments, the applicable provisions of the 2002 N.F.P.A. 72 and the 2006 Life Safety Code. Plans must be submitted to the College Station Fire Marshal office and after review a permit will be issued. Permits must be obtained before any work can begin. All

system inspections and tests should be scheduled through the College Station Fire Marshal Office.

Planning

Two sets of drawings are required to be submitted to the College Station Building Department which include, but are not limited to the following items:

1. Engineer's seal on plans.
2. Piping locations.
3. Pipe sizes.
4. Hanger locations and hanger details.
5. Head locations and details (walls and other obstructions).
6. Riser specifications including valves, gauges, and fire department connection(s).
7. Hydraulic calculations
8. Building classification (construction type).
9. Hazardous storage and precautions taken for accidental spills.
10. Double check valves shall be installed in accordance with College Station Engineering Division specifications and documentation of testing shall be provided to the Fire Marshal prior to acceptance of the sprinkler system.

Sprinkler system plans shall be submitted to the College Station Building Department at the same time as the building plans. Any concerns regarding the drawings will be addressed and sent back with that set of drawings. If you have any questions regarding the fire sprinkler system please contact the Building Department or the Fire Prevention Division.

Testing

Newly installed sprinkler systems require a two (2) hour two hundred (200) psi hydrostatic test. The testing procedure for existing sprinkler systems is a two (2) hour one hundred fifty (150) psi hydrostatic test.

If an existing system is extensively altered, the system shall be re-tested. The decision to re-test a system shall be determined by the College Station Fire Marshal on a case by case basis. Existing hydraulically calculated systems shall be recalculated when the addition of one or more sprinkler heads is required. (Calculations shall be provided to the Building Department for review)

All sprinkler system valves shall be properly marked in accordance with N.F.P.A. 13.

The hydrostatic acceptance test shall be witnessed and approved by a member of the College Station Fire Marshal's office. The sprinkler system test fee is indicated on the "Inspection/ Test request" located in Appendix A-8. The permit fee shall be paid at

the College Station Building Department. If the system does not pass it is left to the discretion of the Fire Inspector as to whether an additional test fee is required.

Sprinkler piping and hangers shall not be covered and/or concealed by any means prior to being inspected and approved by the College Station Fire Marshal Office. ***This includes drop grid style ceilings***

The underground supply line(s) to the sprinkler riser shall be hydrostatically tested and the results provided to the College Station Fire Marshal Office before the system is approved. (This test is not witnessed by a member of the Fire Prevention Division)

Additional Information

In all structures, except single-family or duplex dwellings protected by an automatic fire sprinkler system as a requirement, an electronic water flow alarm shall be provided as a means of supervising the system. All required systems designed in accordance with N.F.P.A. 13 or 13-R, except in single-family or duplex dwellings, shall be constantly monitored by a licensed alarm company. Any changes that must be made to update the system shall be at the owner's expense. All alarm systems shall be approved by the Building Official and tested by the Fire Marshal or his designee to ensure completion and proper operation. Verification of alarm connection to an alarm company shall be submitted in writing by a representative of the alarm company to the Fire Marshal. Alarm companies under this section will meet current N.F.P.A. 72 Standards.

Suitable signs must be provided on the door of the enclosure that contains any sprinkler system valves and/or controls. The signs shall state "Fire Sprinkler Control Valves" in two (2) inch high block letters with a minimum stroke of one half (½) inch, and of a color contrasting with its background. Valves or switches that are located within building elements must also be identified in an approved, suitable, and easily identifiable manner at the point of access to said valve or component.

All fire department connections shall be installed at a location approved by the College Station Fire Marshal Office. Fire department connections shall be immediately discernible. A minimum of five (5) feet of clear space shall be maintained around any fire department connection or fire department control valve.

A fire hydrant capable of supplying the sprinkler system shall be located a maximum of one hundred fifty (150) feet from the fire department connection.

Shelving units and shelves shall be constructed so that storage will be no closer than two (2) feet below any ceiling or closer than eighteen (18) inches below the horizontal plane of any sprinkler head deflector.

A U.L. approved outside electric or hydraulic warning device (bell or horn) shall be installed on the outside of the structure proximate to the fire department connection of a building protected by a sprinkler system.

Sprinkler valves shall be secured in accordance with N.F.P.A. 13. In sprinkler protected structures that are protected with a fire alarm detection system, valves shall be tied directly into a supervisory alarm circuit and shall be monitored through the fire alarm system. In structures that are not protected by a fire alarm system, the sprinkler control valves shall be secured by one of the following methods: Locked in the open position with a chain and/or padlock; locked in a room designated for that purpose and identified on the door accordingly; or locked in a cage or other approved area that can be adequately supervised and secured.

Kitchen Fire Extinguishing Systems

Cooking hood extinguishing systems providing protection for cooking and ventilation equipment will be reviewed by the Building Department. For a complete review to take place the following information shall be provided:

1. A full set of drawings shall be submitted to the College Station Building Department.

2. Description of extinguishing system type (automatic sprinkler, carbon dioxide, dry chemical or liquid agent).

3. Type of system design (Engineered system versus a pre-engineered system).

4. Engineered and pre-engineered systems shall contain full details of system design.

5. Design shall specifically note interconnection for fuel supply shutoff, ventilation control, damper control, associated ducting system, etc. Power to appliances (gas, electrical, etc.) located under the protection of the extinguishing system shall completely shut off upon system activation.

6. Cooking hood extinguishing systems shall be designed in accordance with the latest locally adopted editions of N.F.P.A. 12, 12A, 13, 17,17A, and 96; the International Fire Code, International Building Code, International Mechanical Code, and any applicable local amendments and rules.

7. Monitoring of cooking hood suppression systems shall be in accordance with N.F.P.A. 72 when applicable.

8. An inert gas blow-off test shall be conducted on all new or remodeled systems prior to acceptance. The permit fee shall be paid at the College Station Building Department. If the system does not pass it is left to the discretion of the inspector as to whether an additional test fee is required.

9. Please allow twenty-four (24) hours advance notice for a system test. Call the College Station Fire Marshal Office to schedule an acceptance test.

Appendix A

FIRE HYDRANT INSTALLATION DETAIL

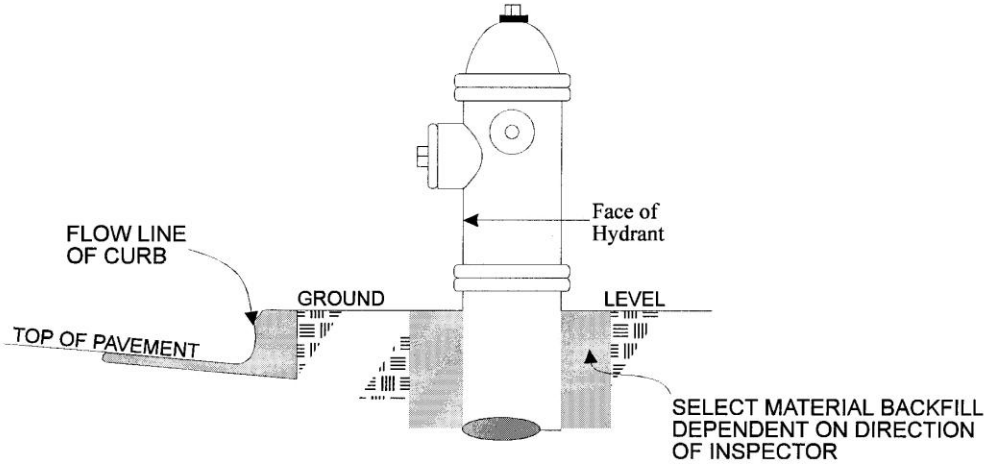

GENERAL NOTES

1) HYDRANT NOZZLES SHALL BE POSITIONED AT RIGHT ANGLES TO CURB. IF NO CURB OR SIDEWALK EXISTS, CONTACT FIRE MARSHALL'S OFFICE FOR SITE EVALUATION

2) HYDRANTS WILL BE PLACED A MINIMUM OF 5.0 FT. FROM ANY UTILITY OR DRAINAGE STRUCTURE

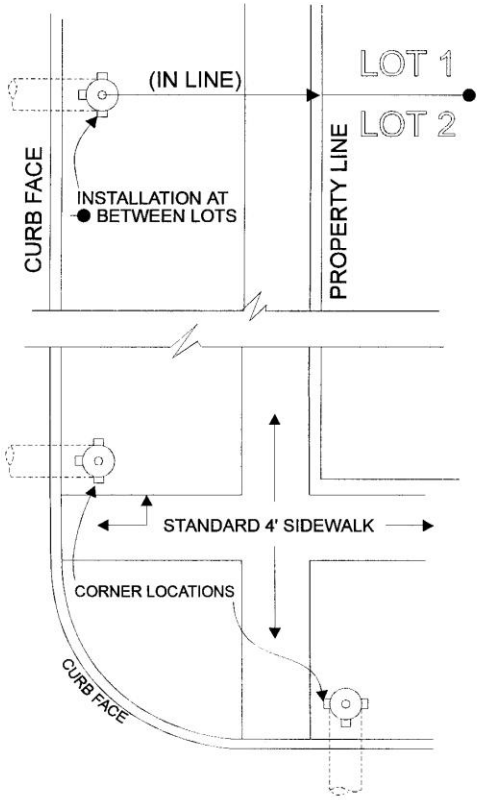

DETACHED SIDEWALK LOCATIONS

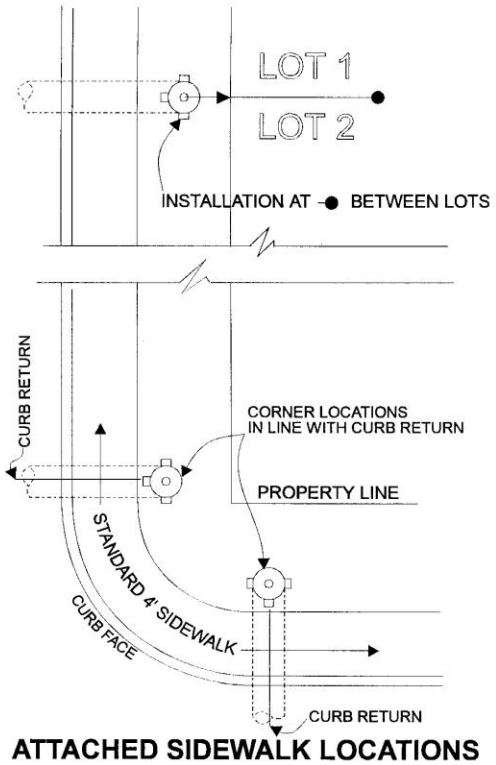

ATTACHED SIDEWALK LOCATIONS

A1

FIRE HYDRANT BOLLARD DETAIL

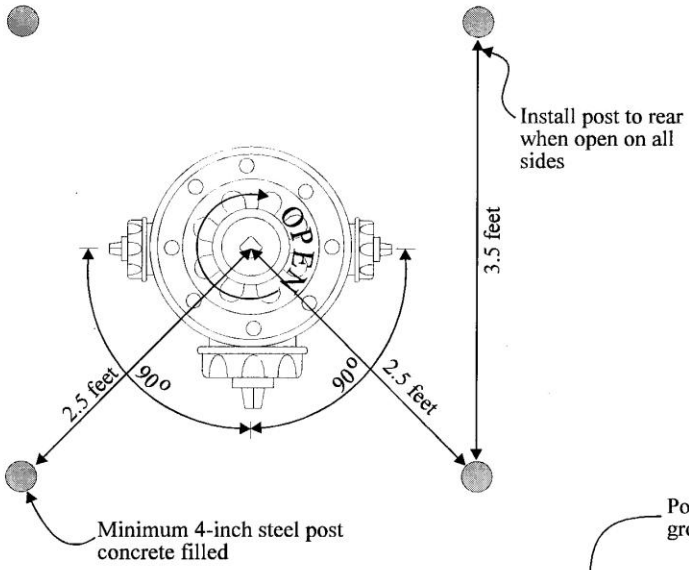

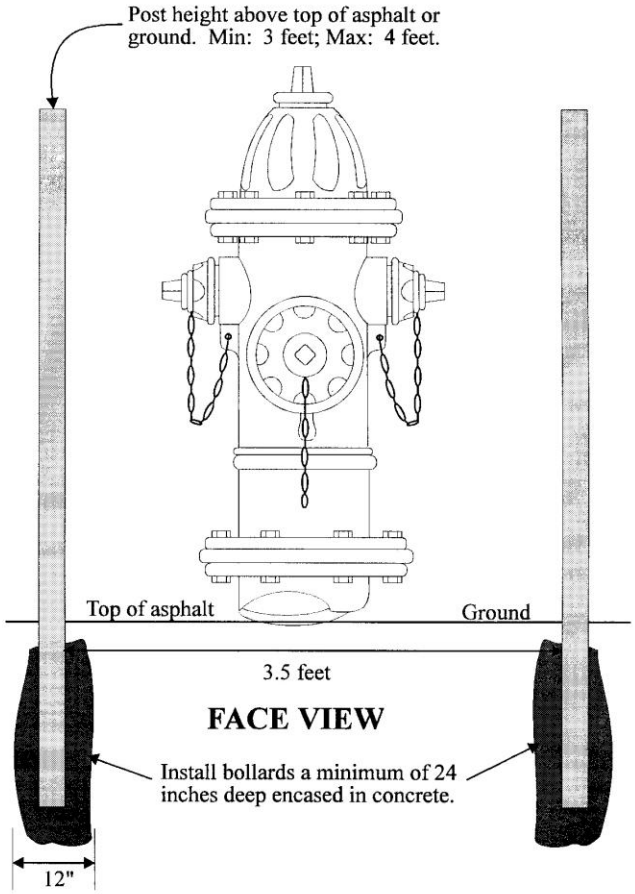

A2

APPROVED ACCESS ROADWAY TURNAROUNDS

City Access Roadways

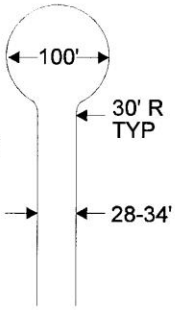

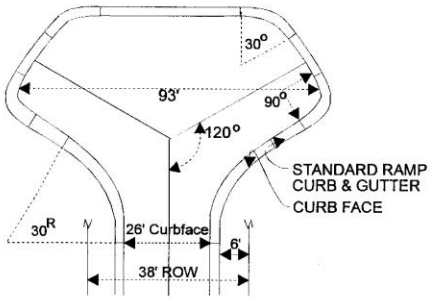

Cul-de-sac not to exceed 600 feet

Alternate access roadways considerations for private driveways (one to two homes maximum) and special approved applications.

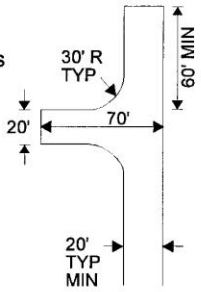

ACCEPTABLE ALTERNATIVE TO 120' HAMMERHEAD

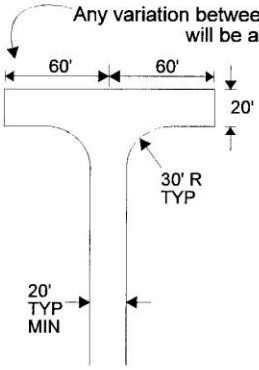

120' HAMMERHEAD

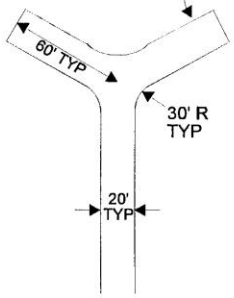

ACCEPTABLE ALTERNATIVE TO 120' HAMMERHEAD

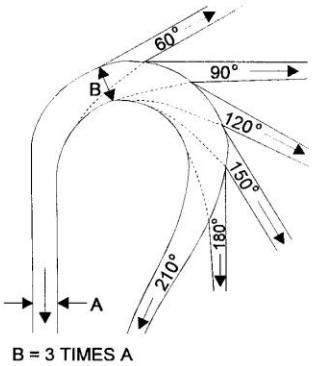

SEMITRAILER WHEELTRACKS 48' RADIUS

Misc.

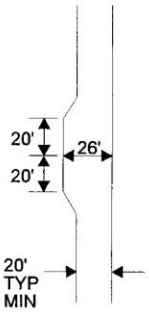

MINIMUM CLEARANCE AROUND A FIRE HYDRANT

A3

TURNING RADIUS SPECIFICATIONS

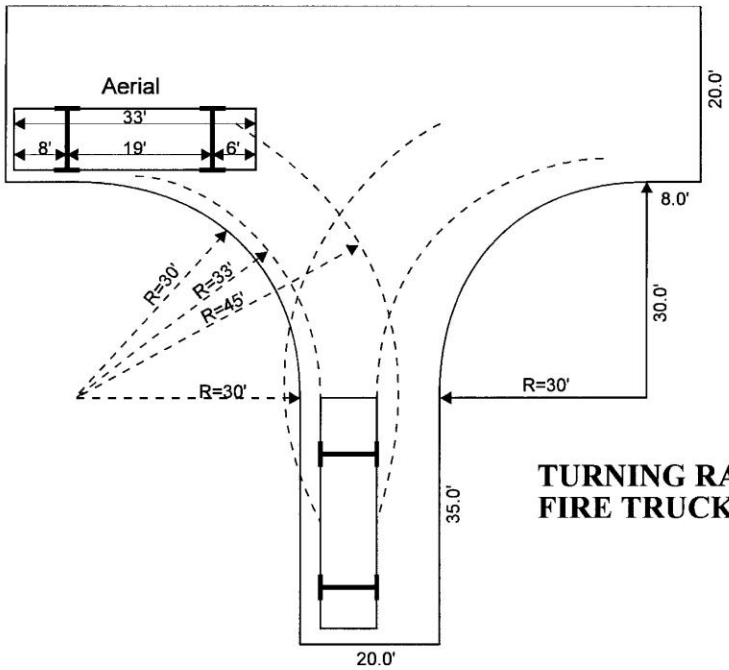

TURNING RADIUS REQUIRED FOR FIRE TRUCKS IN A TEE TURNAROUND

TURNING RADIUS REQUIRED FOR FIRE TRUCKS IN A CIRCLE TURNAROUND

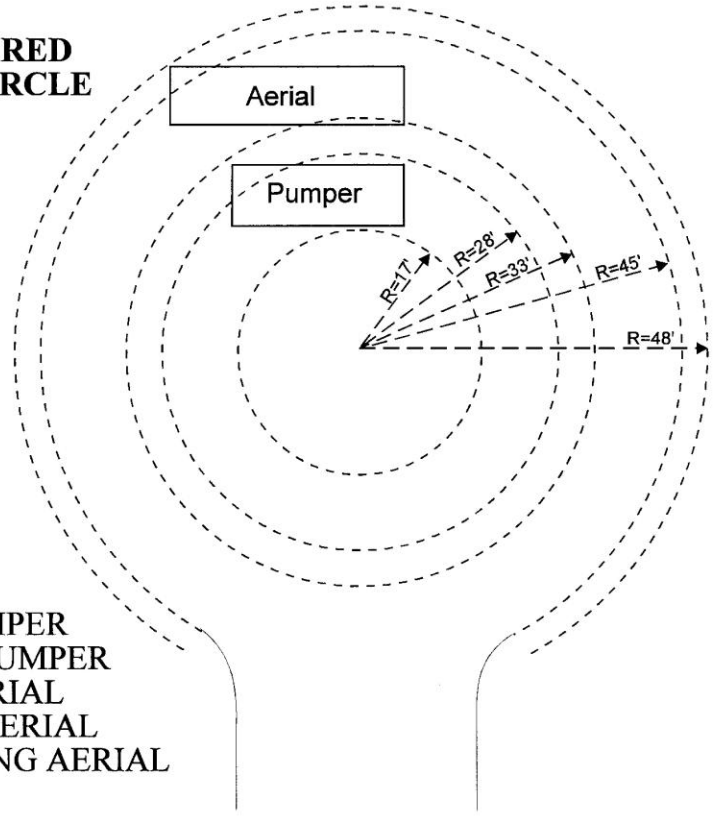

R-17': INSIDE WHEEL PUMPER
R=28': OUTSIDE WHEEL PUMPER
R=33': INSIDE WHEEL AERIAL
R=45': OUTSIDE WHEEL AERIAL
R=48': OUTSIDE OVERHANG AERIAL

A4

FIRE LANE MARKINGS

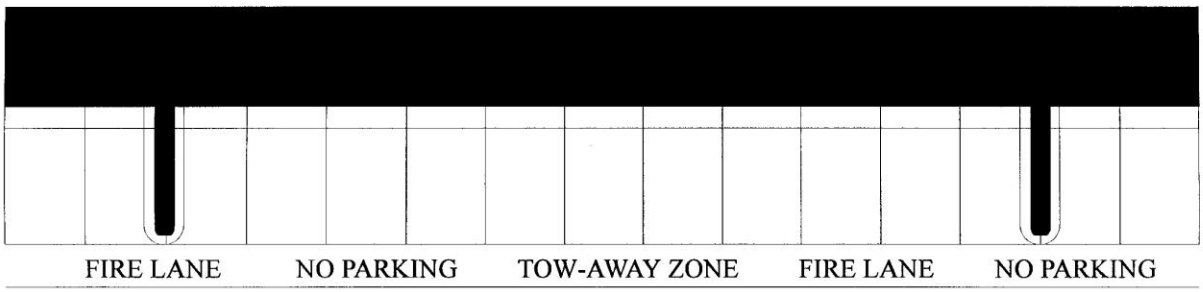

8" red stripe painted on drive surface with 4" white letters stating
FIRE LANE NO PARKING TOW-AWAY ZONE

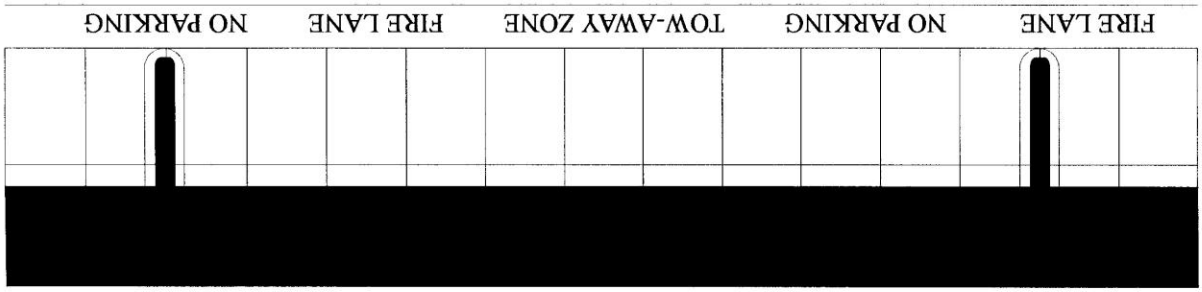

A5

Ordinance No. 2529
Chapter 6 Section 1 (B) (10)
Subsection 503.3
City of College Station
Code of Ordinances

503.3 Fire Lane Markings

(a) The owner, manager, or person in charge of any building or property to which fire lanes have been approved or required by engineering shall mark and maintain said fire lanes in the following manner:

All curbs and curb ends shall be painted red with four (4) inch white lettering stating "FIRE LANE -NO PARKING -TOW AWAY ZONE". Wording may not be spaced more than fifteen (15) feet apart.

In areas where fire lanes are required, but no continuous curb is available, one of the following methods shall be used, in conjunction with the curb markings, to indicate that the fire lane is continuous:

Option # 1: A sign twelve (12) inches wide and eighteen (18) inches in height shall be mounted in a conspicuous location at each entrance to the property. Signs shall be mounted no closer than four (4) feet or higher than five (5) feet above grade level as measured from the top of the sign. (See appendix A-5 for sign specifications)

Option # 2: From the point the fire lane begins to the point the fire lane ends, including behind all parking spaces which adjoin a fire lane, shall be marked with one continuous eight (8) inch red stripe painted on the drive surface behind the parking spaces. All curbing adjoining a fire lane must be painted red. Red stripes and curbs will contain the wording "FIRE LANE-NO PARKING-TOW AWAY ZONE" painted in four (4) inch white letters. (See appendix A-5 for more information)

Exit Sign Requirements

- Exit signs shall be installed and comply with the 2006 International Building Code requirements.

- Additional exit signs, lights, or markings may be required to assure the exit way is readily identifiable regardless of the occupant load.

- Graphics on exit signs shall be BLOCK letters a minimum of six (6) inches in height with a minimum stroke of three-quarter (¾) inches.

- A secondary or emergency source of illumination shall be provided for all occupancies. Duration of the emergency power shall be no less that one and one half (1½) hours.

- Required illuminated signs shall be internally or externally illuminated in accordance with 2006 International Fire Code section 1006.

- Exit signs shall be installed at all required exit doorways and where otherwise necessary to clearly indicate the available egress systems. If two (2) or more exits are required, exit of the respective exit ways must be indicated with signs to clearly indicate each individual exit egress system.

Appendix B

College Station Fire Department Standard Comments

1. Prior to and during all phases of combustible construction all required access roadways and fire lanes must be made serviceable and maintained for fire protection and emergency medical purposes.

2. Required street and "on-site" fire hydrants and water mains must be installed, operable (wet) and accepted by the Engineering Division. Compliance with applicable sections of the 2006 International Fire Code, 2006 International Building Code and City Ordinances is required.

3. Access roadways shall extend to within one hundred fifty (150) feet of all first story exterior portions of any building in accordance with 2006 International Fire Code Section 503.1.1.

4. Fire Department access roadways shall be a minimum of twenty (20) feet wide; have a minimum of fourteen (14) feet of vertical clearance; be maintained and unobstructed in all types of weather; be engineered and constructed to support the weight of a fire apparatus in accordance with Chapter 6 Section 1 (B) (8) City of College Station Code of Ordinances.

5. Dead-end access roads (with required fire lanes) in excess of one hundred (100) feet in length shall be provided with an approved fire department turnaround in accordance with Chapter 6 section 1 (B) (9) City of College Station Code of Ordinances. (See appendix A-3 for approved turnarounds)

6. Cul-de-sacs shall not exceed twelve hundred (1200) feet in length in the city and two thousand (2000) rural to radius point, and shall terminate in a turnaround not less than one hundred (100) feet in diameter, with a pavement diameter of eighty (80) feet.

7. Fire lanes shall be established and marked as per Chapter 6 Section 1 (B) (10) subsections 503.2., 503.2.1, 503.2.2, and 503.2.3 City of College Station Code of Ordinances.

College Station Fire Department
Requirements for Plans Submittal

New Commercial Buildings

Two (2) complete sets of plans on 24" X 36" sheet that shall include but is not limited to:

- ❑ Site plan (including all parking, driving surfaces and adjacent Public Street)
- ❑ Floor plan
- ❑ Mechanical Details
- ❑ Electrical Details (exit lighting, emergency lighting, etc.).
- ❑ Approved Site Construction Documents (i.e., water lines for fire hydrants, fire hydrant[s])
- ❑ Proposed use
- ❑ Plans shall indicate floor level (1st, 2nd, etc.).
- ❑ A legend is required for clarification.
- ❑ Registered Architect or Engineer's seal will be placed on plans when required (outlines provided in the International Building Code).
- ❑ Title box with the following information:
  1. Name of architectural or engineering firm.
  2. Address of same.
  3. Phone number.
  4. Site address.
- ❑ If the new structure requires the installation of a fire sprinkler system (required by either the 2006 International Building Code, 2006 International Fire Code or City Ordinance) fire sprinkler plans must be submitted and meet the standards of N.F.P.A. 13.
- ❑ Locations of all cooking facilities (fire suppression systems, hood systems, etc.).
- ❑ Buildings protected by a fire sprinkler system(s) shall be monitored by a licensed alarm company at all times and provide written verification of same.

College Station Fire Department
Requirement for Plans Submittal

Commercial Tenant Lease Space -- New or Remodeled

Two (2) complete sets of plans on minimum 11" X 17" sheet that includes but is not limited to:

- ❑ Site plan of building and affected area of construction
- ❑ Floor plan
- ❑ Proposed use
- ❑ Scale used (architectural or engineering only).
- ❑ Plans shall indicate floor level (1st, 2nd, etc.).
- ❑ A legend is required for clarification.
- ❑ North directional arrow
- ❑ Title box with the following information:
  1. Name of contractor, architectural or engineering firm.
  2. Address of same.
  3. Phone number.
  4. Site address.
- ❑ If structure has an existing fire sprinkler system or is required to install a new system, the fire sprinkler plans must be submitted and meet the standards of N.F.P.A. 13.
- ❑ Locations of all cooking facilities (fire suppression systems, hood systems, etc.).
- ❑ If footprint or outside dimension of the building is changed the additional information below is required:
  1. Fire hydrant locations.
  2. Parking and drive surfaces located around the building.
  3. All adjacent public streets.

College Station Fire Department Addressing Requirements
City Of College Station Code of Ordinances

505.1 Specifications for Numbers

An official building number placed pursuant to this ordinance must be at least four inches (4") high, and have at least a one-half inch (1/2") stroke in the main body of the number, and be composed of a durable material and of a color which provides a contrast to the background. The number shall be mounted a minimum of thirty-six inches (36") and a maximum of thirty feet (30') in height measured from ground level. Buildings located more than fifty feet (50') from the curb of a street shall have numbers at least five inches (5") in height. For the purpose of this ordinance, durable materials for use in numbering shall include but not be limited to wood, plastic, metal, weather-resistant paint, weather-resistant vinyl, or weather-resistant numbers designed for outside use on a glass surface. For single family residences, the requirement of this section may be met by providing two inch (2") high numbers on both sides of a U.S. mailbox located near the curb in front of the house, or a freestanding structure with numbers at least four inches (4") in height.

505.1.1.4 Numbering Within Building Complexes; Numbering Rear Accesses

A building complex composed of multiple structures shall have an official number assigned to each building as well as a street number. Each unit within each building must also be assigned an official number. If there is sufficient street frontage, each unit within each building must also be assigned an official number. If there is sufficient street frontage, each unit or building may be assigned a separate official street address number. The official number of each structure must be prominently posted on the building so that it is visible from the nearest public street. Each number designated by the Building Official must be prominently posted on the building so that is visible from the nearest public street. Each number designated by the Building Official for each individual unit must be conspicuously posted on the unit. Commercial buildings shall also display the business name and designated address on each outside door. Residential structures, which provide for rear vehicular access from a dedicated public alley, shall conspicuously post the designated number so that it is visible to the alley.